FLANGE DIMENSIONS- ANSI CLASS

FLANŞ ÖLÇÜLERİ - ANSI CLASS

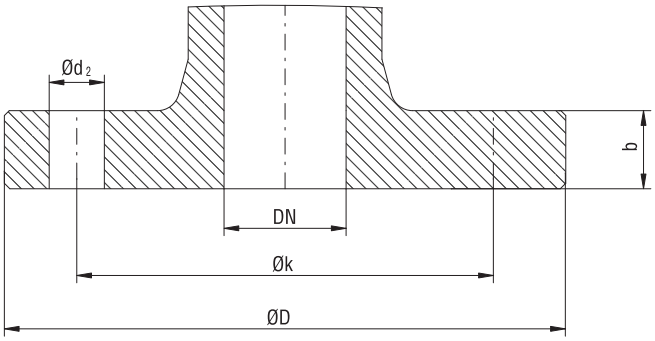

CLASS 125

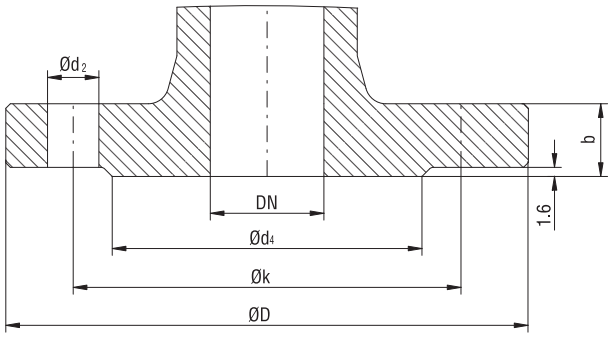

CLASS 150,300,600

	PİK DÖKÜM-CAST IRON				ÇELİK DÖKÜM-CAST STEEL															
	CLASS 125				CLASS 150					CLASS 300					CLASS 600					
DN	D	k	b	$d_2$xn	D	k	d_4	b	$d_2$xn	D	k	d_4	b	$d_2$xn	D	k	d_4	b	$d_2$xn	DN
15	89	60.3	11.1		89	60.3	35	11.1		95.3	66.7	35	14.3	16x4	95	66.5	35	14.3	16x4	15
20	98.4	70	12.7		98.4	70	43	12.7		117.5	82.6	43	15.9		117	82.5	43	15.9		20
25	108	79.4	11.1	16x4	108	79.4	51	14.3	16x4	123.8	88.9	51	17.5	19x4	124	89.0	51	17.5	19x4	25
32	117	88.9	12.7		117.5	89	64	15.9		133.4	98.4	64	19.1		133	98.5	64	20.7		32
40	127	98.4	14.3		127	98.4	73	17.5		155.6	114.3	73	20.7	22x4	150	114.5	73	22.3	22x4	40
50	152.4	120.7	15.9		152.4	120.7	92	19.1		165	127	92	22.3	19x8	165	127	92	25.4	19x8	50
65	177.8	139.7	17.5	19x4	177.8	139.7	105	22.3	19x4	190.5	149.3	105	25.4		190.5	149.4	105	28.6	22x8	65
80	190.5	152.4	19.1		190.5	152.4	127			209.5	168.3	127	28.6	22x8	209.5	168	127	31.8		80
100	228.6	190.5	23.9	19x8	228.6	190.5	157	23.9	19x8	254	200	157	31.8		273	216	157	38.1	25x8	100
125	254	216			254	216	186			279.5	235	186	35.0		330	266.7	186	44.5	29x8	125
150	279.4	241.3	25.4	22x8	279.4	241.3	216	25.4	22x8	318	269.7	216	36.6	22x12	355.6	292	216	47.7	29x12	150
200	343	298.5	28.6		343	298.5	270	28.6		381	330	270	41.3	25x12	419	349.2	270	55.6	32x12	200
250	406.4	362	30.2		406.4	362	324	30.2		445	387.4	324	47.7	29x16	508	431.8	324	63.5	35x16	250
300	482.6	431.8	31.8	25x12	482.6	431.8	381	31.8	25x12	521	451	381	50.8	32x16	559	489	381	66.7	35x20	300
350	533.4	476.3	35.0	29x12	533.4	476.3	413	35.0	29x12	585	514.5	413	54.0	32x20	603.3	527	413	69.9	38x20	350
400	597	539.8	36.6	29x16	597	539.8	470	36.6	29x16	648	571.5	470	57.2	35x20	686	603.2	470	76.2	41x20	400
450	635	577.9	39.7	32x16	635	578	533	39.7	32x16	711	628.6	533	60.4	35x24	743	654	533	82.6	45x20	450
500	698.5	635	42.9	32x20	698.5	635	584	42.9	32x20	775	685.8	584	63.5		813	724	584	88.9	45x24	500
600	813	749.3	47.7	35x20	812.8	749.3	692	47.7	35x20	914.5	812.8	692	69.9	41x24	940	838.2	692	101.6	51x24	600